Experiment No: 04
Experiment Name: Experiment on Double Side Band-Suppressed Carrier Modulation and Demodulation using Hardware

Objective:
1. To understand how to generate DSB-SC modulation.
2. To observe the changes in DSB-SC signals in different parameter.
3. To observe the signal reconstruction by DSB-SC demodulation.

Requirements:
1. Module KL-93003
2. Oscilloscope
3. Function generator
4. Power supply
5. Connecting wire & plug

Circuit Diagram:

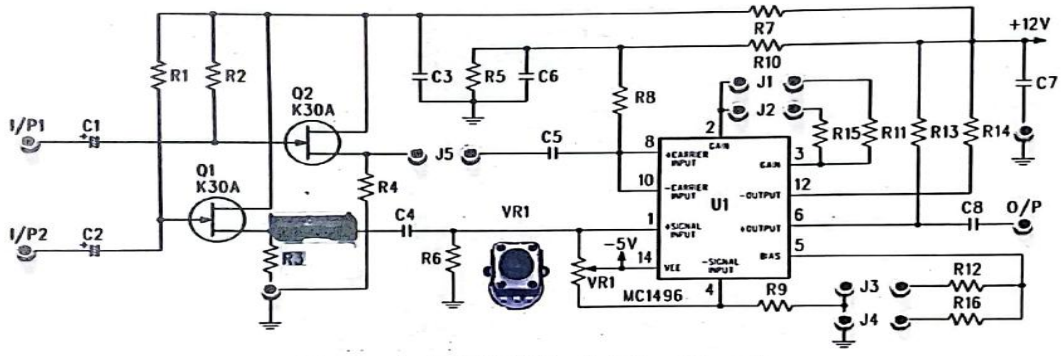

Figure 1. DSB-SC Modulator Circuit

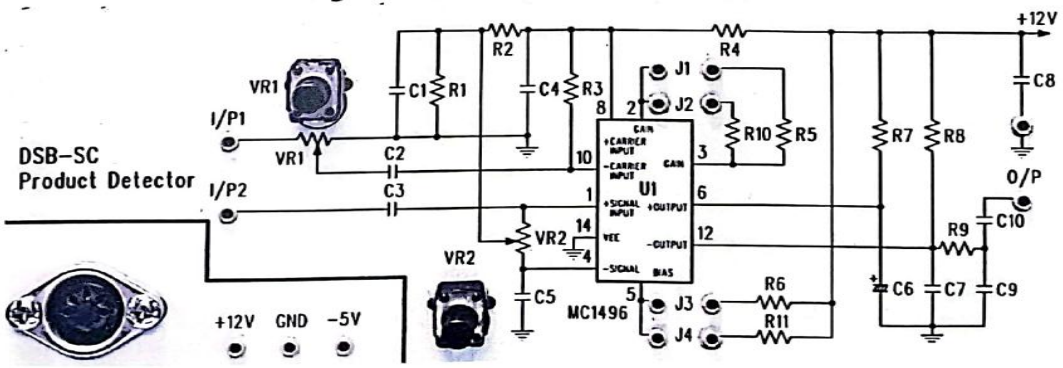

Figure 2. Product Detector DSB-SC Signal

Working Procedure:
Follow the following steps:
1.Locate DSB-SC modulator & demodulator circuit on Module KL-93003.
2. Insert connect plug J5, J6, J1 and J3 of modulator circuit and J1 sets R11=270ohm and J3 sets R12=6.8kohm and insert connect plug J1 & J3 of demodulator circuit.
3.Function generator 1 for carrier frequency and FG2 for Message signal

In Modulator circuit:

1. Connect I/P2 with ground of the module using a wire.
2. Set frequency and amplitude of Function generator-1 to 500kHz, 500mVp-p sine wave
3. Connect Carrier frequency to I/P1. Observe the output using oscilloscope. Adjust the VR1 to get the output signal zero or minimum.
4. Now set the carrier frequency to 500kHz, 480mVp-p and FG-2 to 1kHz, 16.2Vp-p
5. Remove the wire between I/P2 and ground. Connect message signal to I/P1.
6. Observe the modulated output and record in data table.

For demodulation:

1. Connect Modulator output to I/P2 and same carrier signal to I/P1 of demodulator circuit. Observe the demodulated output and record in data table. If the output is distorted adjust VR1 & VR2.

Data Table:

Input Parameter				Modulated Output Waveform	Demodulated Output Waveform
V_c	V_m	F_c	F_m		
480mV	16.2mV	500kHz	1kHz		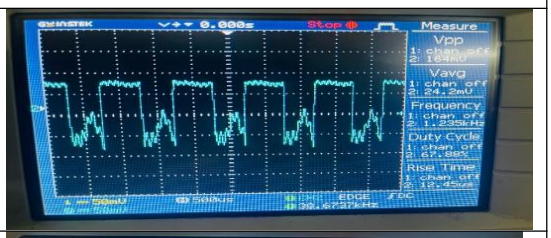
480mV	16.2mV	500kHz	2kHz		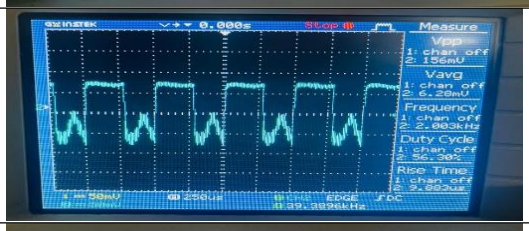
480mV	16.2mV	1MHz	2kHz		
480mV	16.2mV	1MHz	1kHz		

Discussion: In this experiment, we learned how to create and recover DSB-SC signals. By changing the carrier and message frequencies, we saw different waveforms on the oscilloscope. The demodulation process helped us get back the original message signal clearly.We saw that higher carrier frequency made the waveform more compressed, and changing the message frequency

changed the shape of the signal. Adjusting VR1 and VR2 was important to get a clear output without distortion. This experiment helped us understand how DSB-SC works in real life and how signals can be sent and received without using the carrier.We also saw how the modulated signal depends on both the carrier and message signal strength. If the settings are not correct, the output can be weak or unclear. This shows the importance of careful tuning in communication systems. It also helped us understand how real-world circuits behave during signal transmission and recovery.